LEDWIDE
LEDWIDE LIGHTING CO.,LTD

Tel: 0086 755 29362351 Direct: 0086 0 18680360436
Fax: 86 755 29014058 E-mail: info@ledwide.com
www.ledwide.com
Address:1-2/F, Building A2,Sinopol Ind.Park, First Industrial Zone, BaiHua communities, Guangming New District, Shenzhen, P.R. China Postcode: 518107

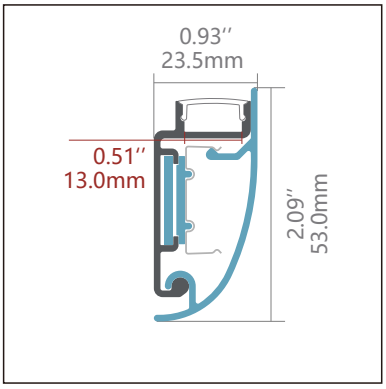

Aluminium LED Profile
LW-AW10

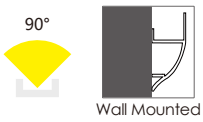

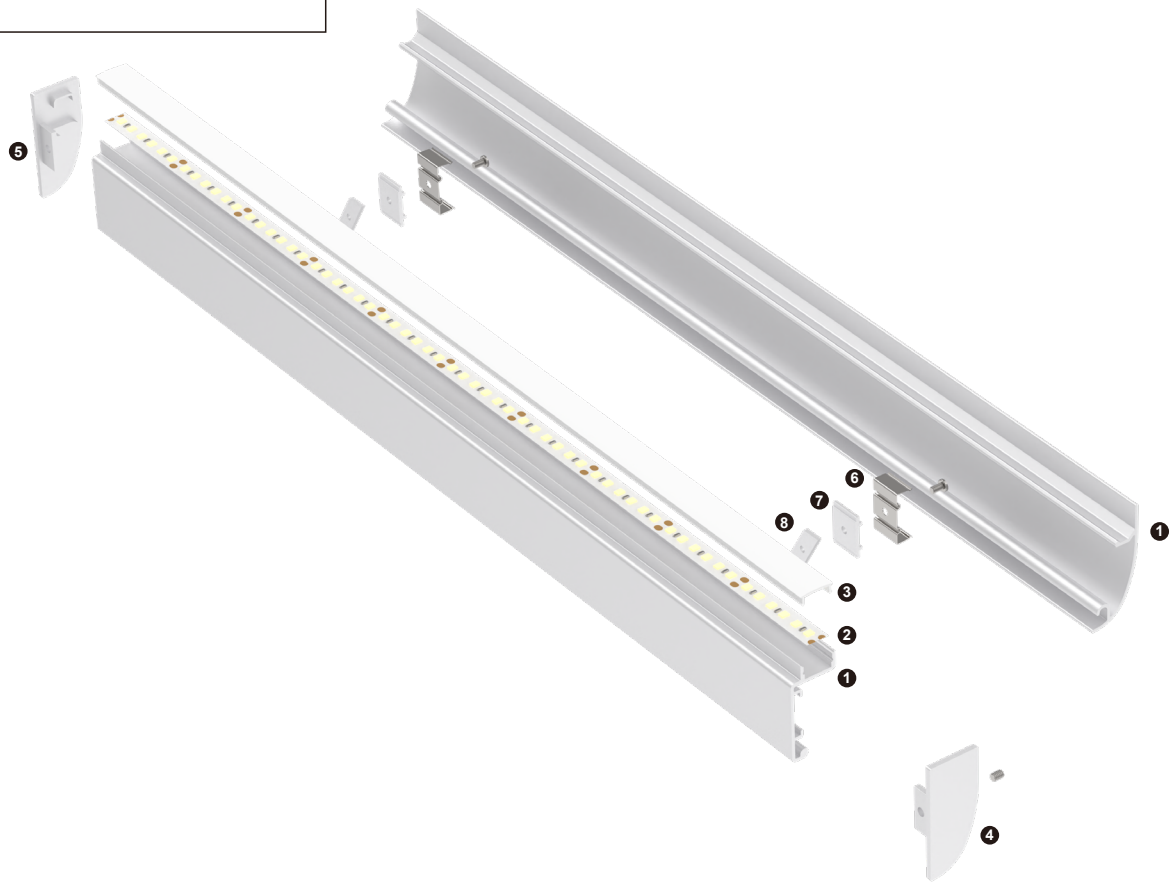

	Name	Code	Material	Color	Other
❶	Aluminum Profile	AW10	Aluminum	Silver / White / Black / RAL color	-
❷	LED strip	-	-	-	MAX. 19.2 W/m
❹	ALU Endcap	AW10-Cap-L	Aluminum	Silver / White / Black / RAL color	-
❺	ALU Endcap	AW10-Cap-R	Aluminum	Silver / White / Black / RAL color	-
❻	Metal Clip	AS3-CLIP	Stainless Steel	ecru	-
❼	ALU Mounting Plate	AW10-ALU-Plate	Aluminum	Silver / White / Black / RAL color	-
❽	ALU 60° Mounting Plate	AW10-ALU-Plate-60	Aluminum	Silver / White / Black / RAL color	-

❸ **Optional Diffuser (PMMA)**

Color	Light Transmittance	Code
Opal	66%	D001-O
Milky	75%	D001-M
Frost	88%	D001-F
Clear	97%	D001-C
Black	21%	D001-B

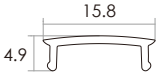

LEDWIDE
LEDWIDE LIGHTING CO.,LTD

Tel: 0086 755 29362351 Direct: 0086 0 18680360436
Fax: 86 755 29014058 E-mail: info@ledwide.com
www.ledwide.com
Address:1-2/F, Building A2,Sinopol Ind.Park, First Industrial Zone, BaiHua communities, Guangming New District, Shenzhen, P.R. China Postcode: 518107



Installing Instructions

Wall Mounted

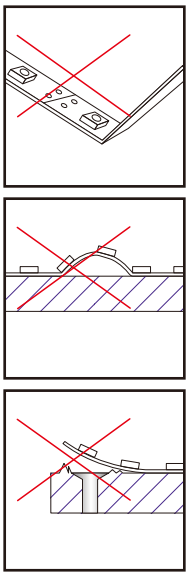

1.

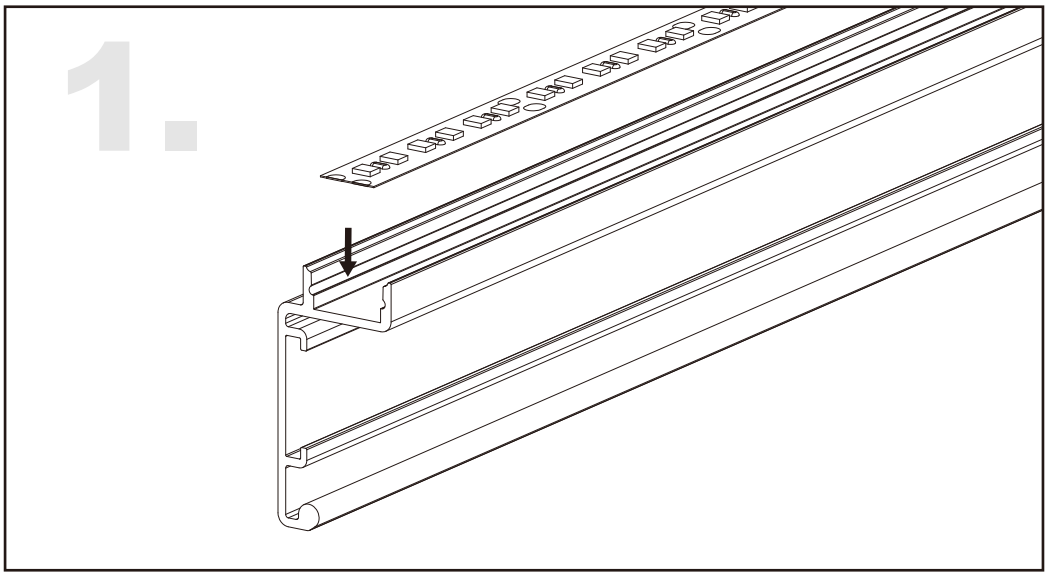

2.

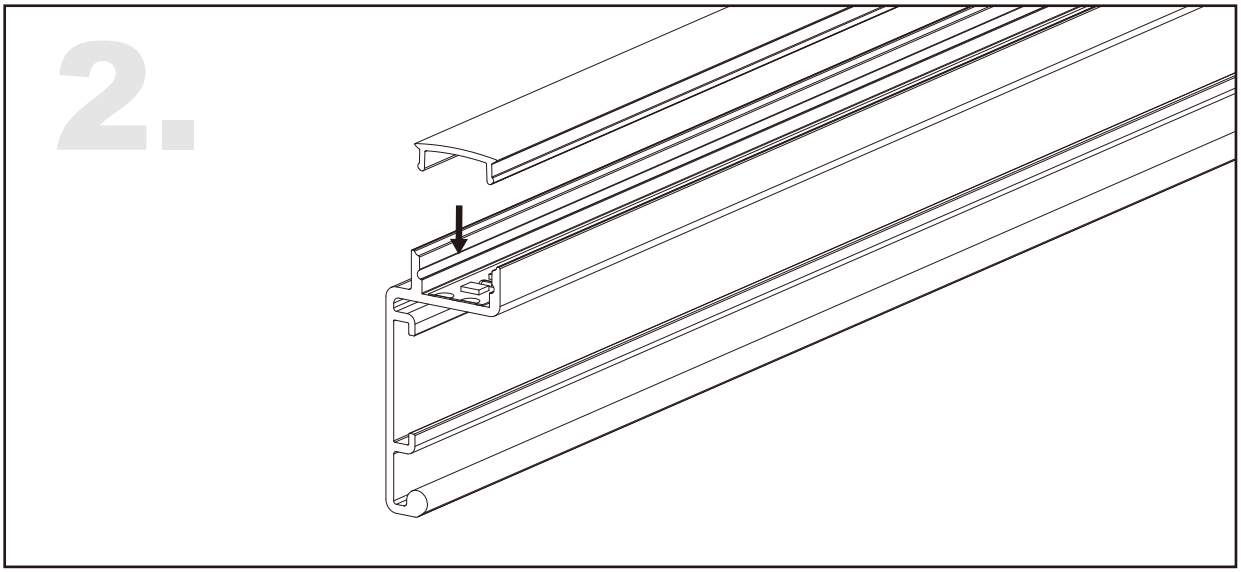

3.

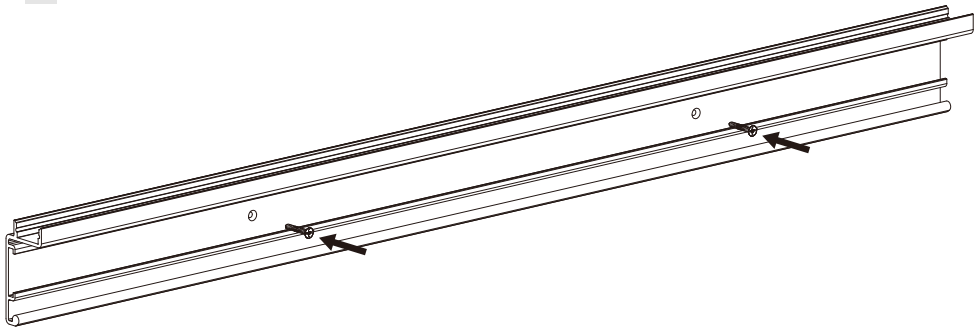

LEDWIDE
LEDWIDE LIGHTING CO.,LTD

Tel: 0086 755 29362351 Direct: 0086 0 18680360436
Fax: 86 755 29014058 E-mail: info@ledwide.com
www.ledwide.com
Address:1-2/F, Building A2,Sinopol Ind.Park, First Industrial Zone, BaiHua communities, Guangming New District, Shenzhen, P.R. China Postcode: 518107



Installing Instructions

Wall Mounted

4.

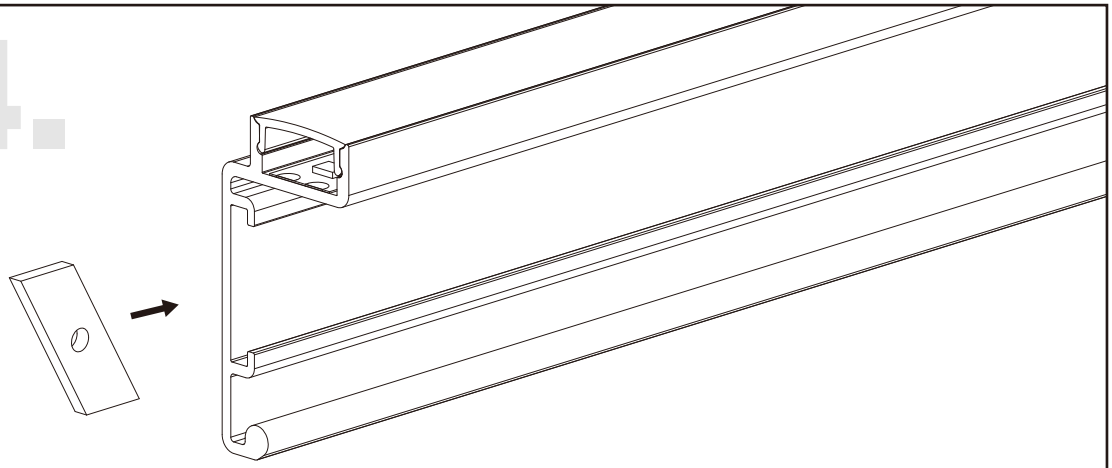

5.

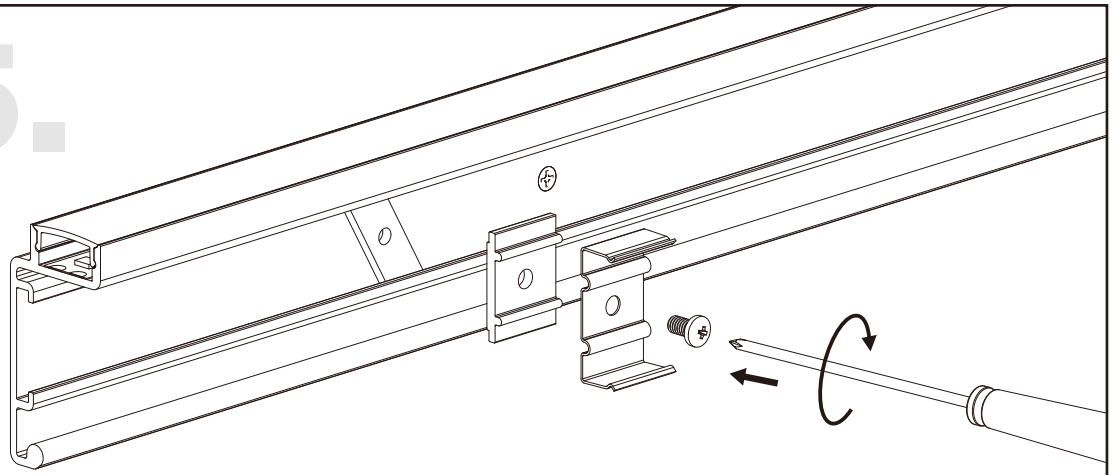

6.

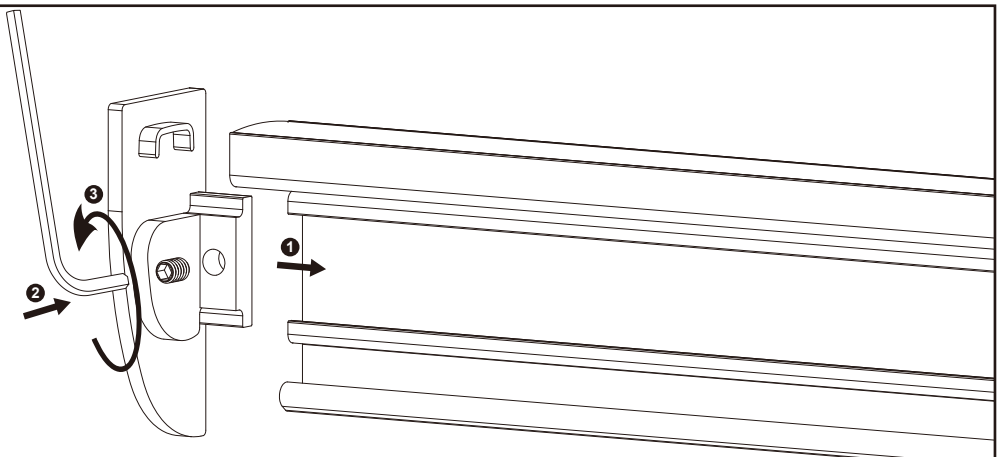

LEDWIDE
LEDWIDE LIGHTING CO.,LTD

Tel: 0086 755 29362351 Direct: 0086 0 18680360436
Fax: 86 755 29014058 E-mail: info@ledwide.com
www.ledwide.com
Address:1-2/F, Building A2,Sinopol Ind.Park, First Industrial Zone, BaiHua communities, Guangming New District, Shenzhen, P.R. China Postcode: 518107



Installing Instructions

Wall Mounted

